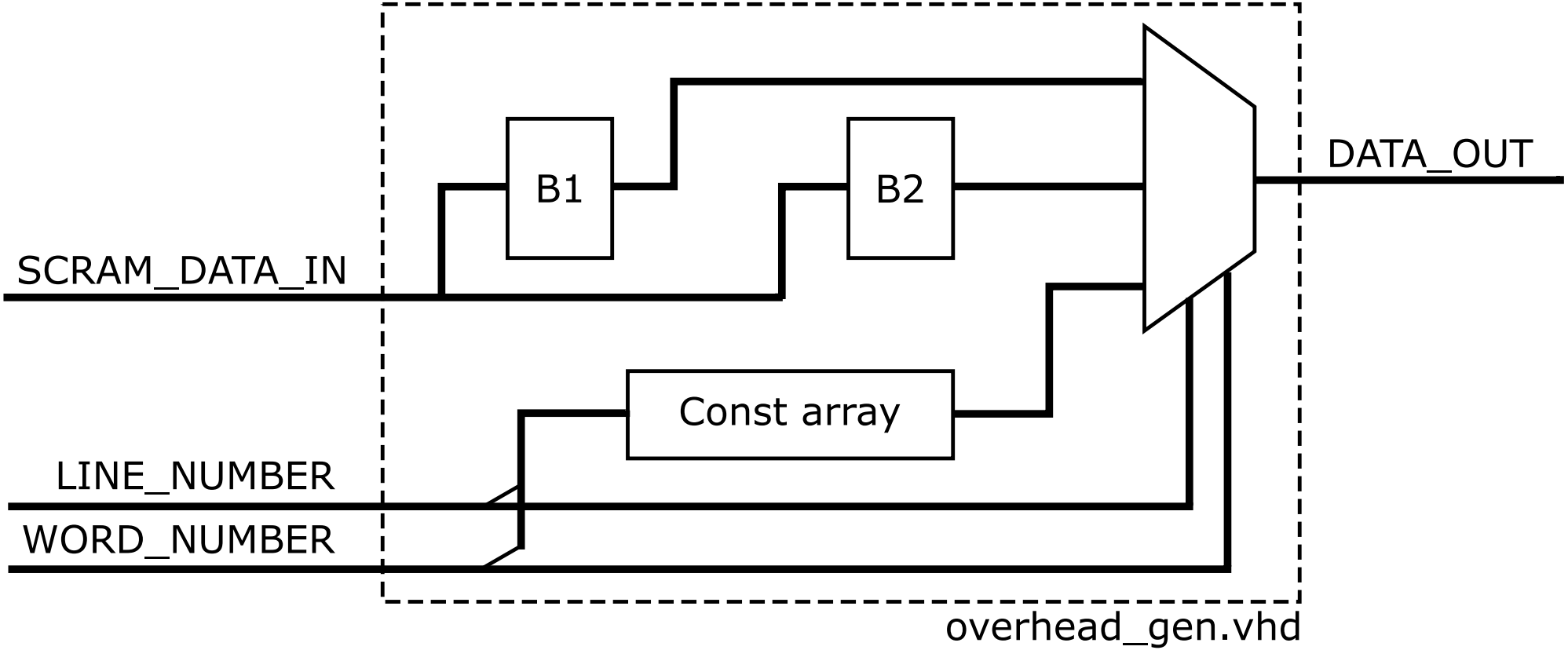
B1
B2
DATA_OUT
SCRAM_DATA_IN
Const array
LINE_NUMBER
WORD_NUMBER
overhead_gen.vhd