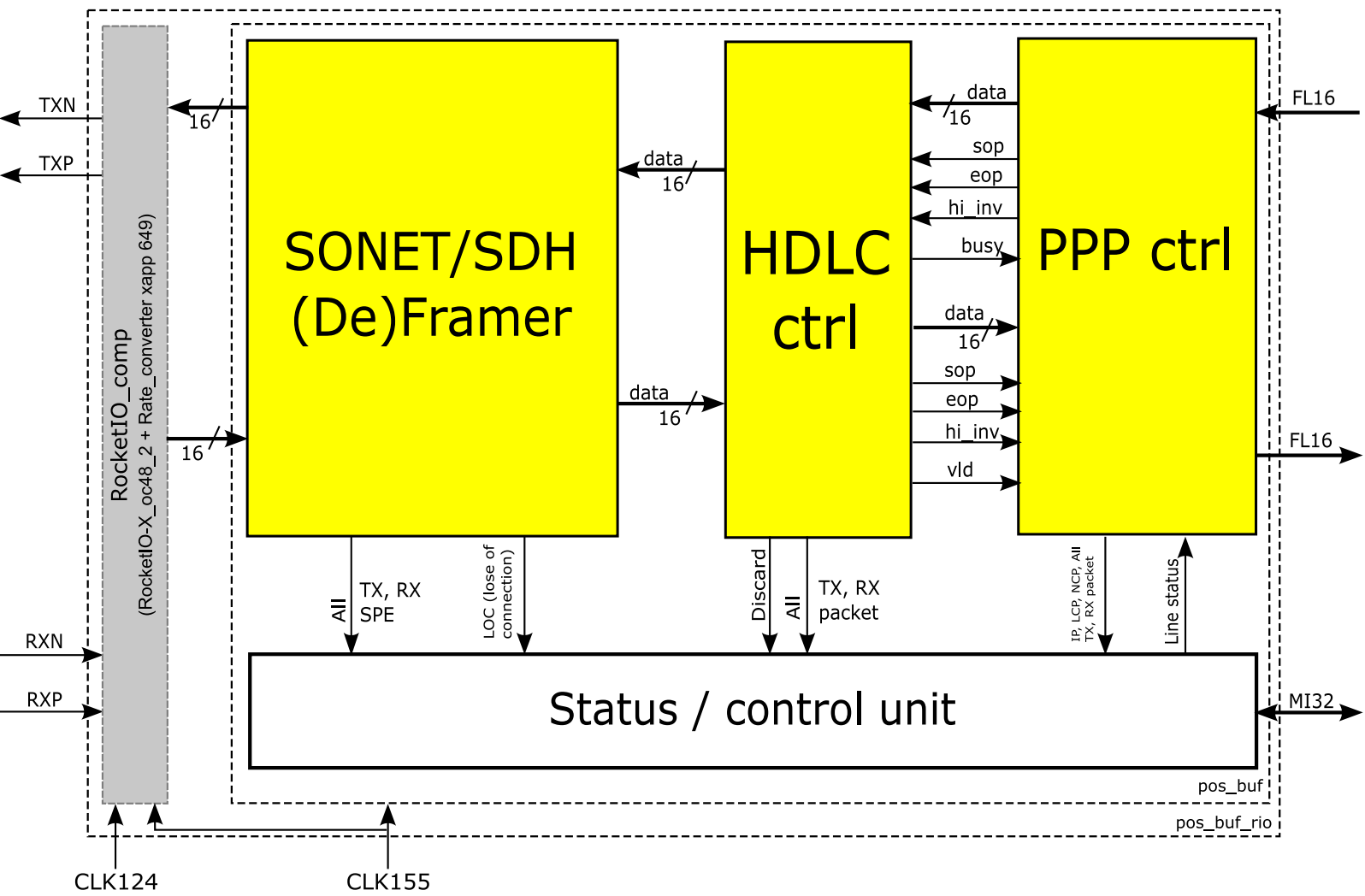
TXN
TXP
RXN
RXP
RocketIO_comp
(RocketIO-X_oc48_2 + Rate_converter xapp 649)
16
16
SONET/SDH
(De)Framer
data
16
data
16
HDLC
ctrl
data
16
sop
eop
hi_inv
busy
data
16
sop
eop
hi_inv
vld
PPP ctrl
FL16
FL16
MI32
All
TX, RX
SPE
LOC (lose of
connection)
Discard
All
TX, RX
packet
IP, LCP, NCP, All
TX, RX packet
Line status
Status / control unit
pos_buf
pos_buf_rio
CLK124
CLK155